FOR-1754 Rev.1.1

未注公差/General tolerances(mm)														
0 ~ 3	>3 ~ 6	>6 ~ 10	>10 ~ 18	>18 ~ 30	>30 ~ 50	>50 ~ 80	>80 ~ 120	>120 ~ 180	>180 ~ 250	>250 ~ 315	>315 ~ 400	>400 ~ 500	>500	0.1/10
±0.12	±0.18	±0.22	±0.26	±0.31	±0.37	±0.57	±0.80	±0.93	±1.05	±1.15	±1.60	±2.20	±2.50	±2°

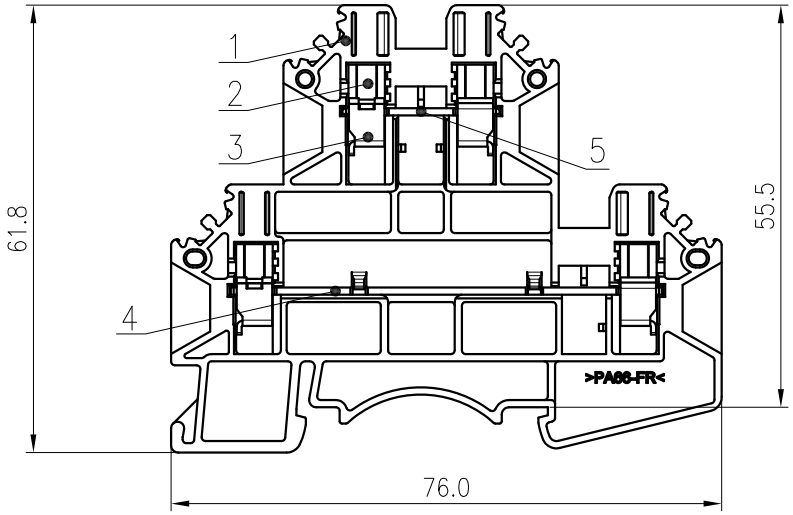

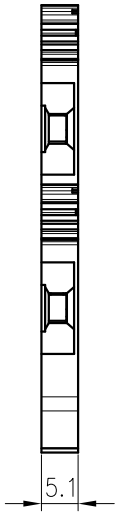

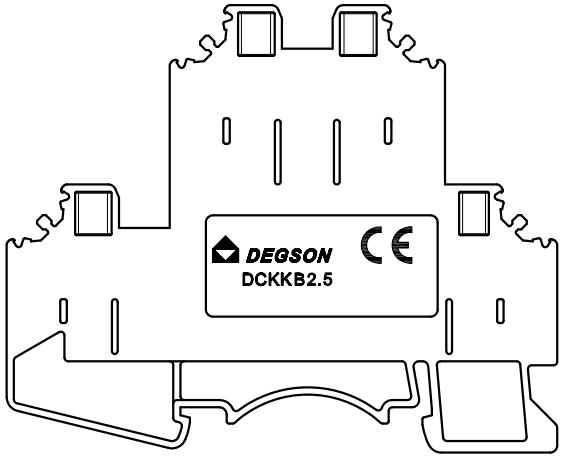

UL 标准/UL Standard:	B	C	D
额定电压/电流/Rated Voltage(V)/Current(A)	300/20	/	/
IEC 标准/IEC Standard:			
过压类别/Overvoltage Category/污染等级/Pollution Degree	III/3	III/2	II/2
额定电压/电流/Rated Voltage(V)/Current(A)	500/24	/	/
额定脉冲电压(KV)/Rate Impulse Voltage(KV)	6.0	/	/
螺丝扭矩/Torque Tightening(N·m/Lb.in)	M2.5, 0.4/3.54		
线径范围(硬线和软线)/Wire Range(rigid and flexible)(mm^2/AWG)	0.5~2.5,4(Sol)/26~12		
间距/Pitch(mm)	5.1		
剥线长度/Stripping length(mm)	8-10		
使用温度范围/Operating temperature(°C)	-40~+105		
符合RoHS环保要求/Conform to RoHS	Yes		

ITEM	NAME OF PART	MATERIAL	NOTES
5	Current Carrier 2	Copper	Sn Plated
4	Current Carrier 1	Copper	Sn Plated
3	Cage	Steel	Zn Plated
2	Screw	Steel	Zn Plated
1	Housing	PA66	UL94 V-0

REV	ECN	DESCRIPTION	DRFT	DATE

MATERIAL: /
SURFACE: /
MAT NO.: /
STATUS: /
APPD: Li GL 2020.05.27
CHKD: Mao J 2020.05.27
DRFT: Huang S 2018.11.09

DEGSON®
宁波高松电子有限公司
NINGBO DEGSON ELECTRICAL CO., LTD

NAME: DCKKB2.5-01P-1Y-00A(H)

DRAWING NO.: DCKKB2.5-C01 | REV: D0-2
SIZE: A4 | mm (inch)
TYPE: CUSTOMER DRAWING | SCALE: 1:1 | SHEET: 1/1