FOR-1754 Rev.1.1

未注公差/General tolerances(mm)														
0 ~ 3	>3 ~ 6	>6 ~ 10	>10 ~ 18	>18 ~ 30	>30 ~ 50	>50 ~ 80	>80 ~ 120	>120 ~ 180	>180 ~ 250	>250 ~ 315	>315 ~ 400	>400 ~ 500	>500	0.1/10
±0.12	±0.18	±0.22	±0.26	±0.31	±0.37	±0.57	±0.80	±0.93	±1.05	±1.15	±1.60	±2.20	±2.50	±2°

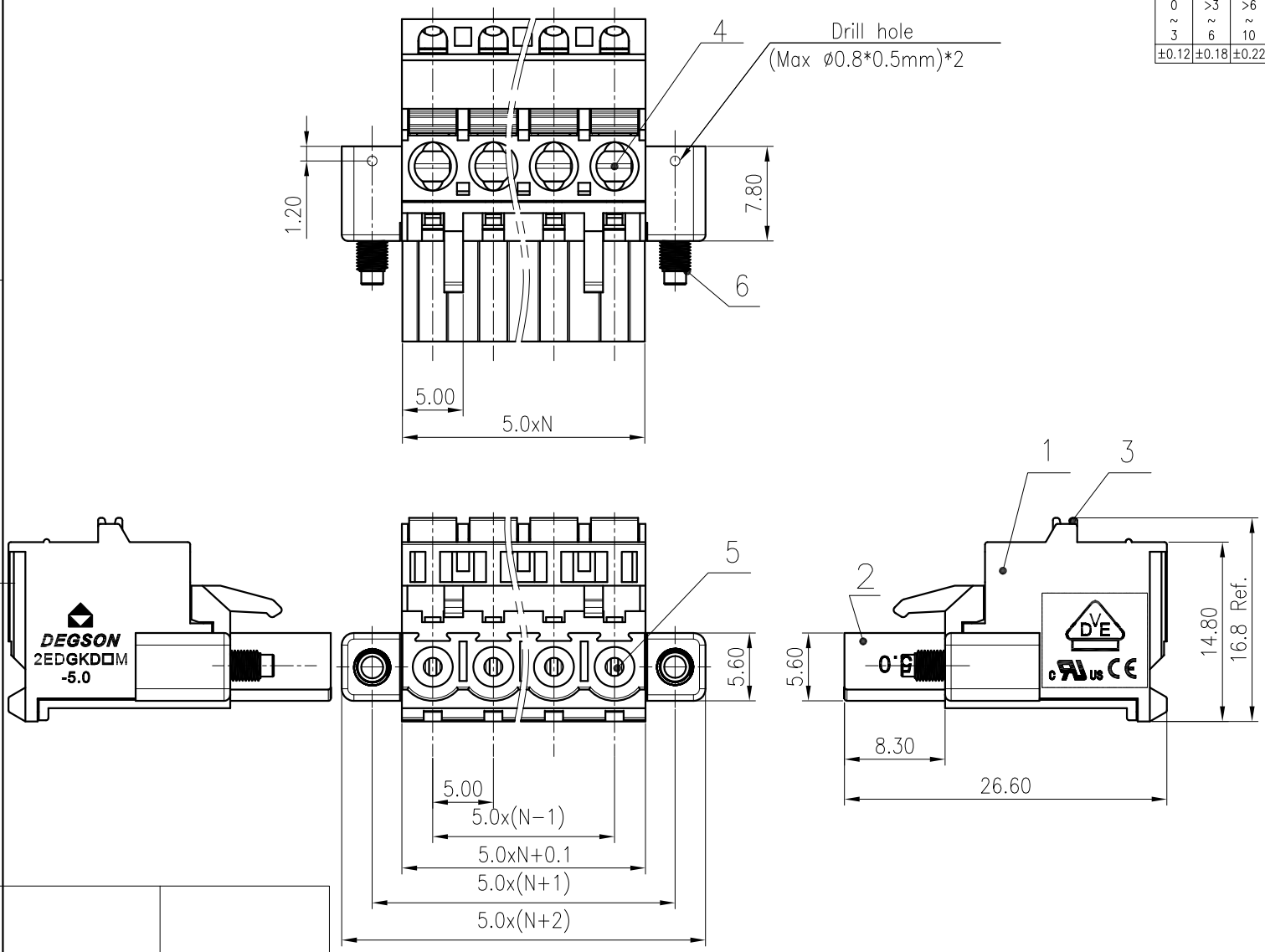

ITEM	NAME OF PART	MATERIAL	NOTES
6	Screw	Steel	Zn Plated
5	Spring	Stainless steel	
4	Clamp	Copper Alloy	Sn Plated
3	Button	PA66	UL94V-0
2	Cover	PA66	UL94V-0
1	Housing	PA66	UL94V-0

UL 标准/UL Standard:	B	C	D
额定电压/电流/Rated Voltage(V)/Current(A)	300/10	/	300/10

IEC 标准/IEC Standard:	
过压类别/Overvoltage Category/污染等级/Pollution Degree	III/2
额定电压/电流/Rated Voltage(V)/Current(A)	320/20
额定脉冲电压(KV)/Rate Impulse Voltage(KV)	4.0
螺丝扭矩/Torque Tightening(N·m/Lb.in)	M2.5 0.4/3.54
线径范围(硬线和软线)/Wire Range(rigid and flexible)(mm^2/AWG)	0.2~2.5/26~12
间距/Pitch(mm)/线数范围/Poles	5.0/N=02~24P
剥线长度/Stripping length(mm)	9-10
使用温度范围/Operating temperature(°C)	-40~+105
符合RoHS环保要求/Conform to RoHS	Yes

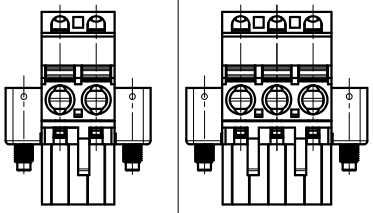

REV	ECN	DESCRIPTION	DRFT	DATE

MATERIAL: /
SURFACE: /
MAT NO.: /
STATUS: /
APPD: LiGL 2020.06.13
CHKD: MaoJ 2020.06.13
DRFT: MEK 2016.04.02

DEGSON®
宁波高松电子有限公司
NINGBO DEGSON ELECTRICAL CO., LTD

NAME: 2EDGKDAM-5.0-XXP-1Y-00A(H)

DRAWING NO.: 2EDGKDAM-5.0-C01 REV T1

SIZE: A4 mm (inch)

TYPE: CUSTOMER DRAWING SCALE: 2:1 SHEET 1/1